gantner

INSPIRED ACCESS

GL7p.x30x

Battery-powered electronic locker lock with optional PIN keypad

FACTS AT A GLANCE

- Multitechnology reader for all common RFID technologies
- With and without PIN-code keypad - mixed application
- Housing front available in white or black
- Clear status indication via push button position
- Elegant, low-profile design - intuitive operation
- Maintenance-free “Low-Power Technology”
- Simple retrofitting of existing lockers, no cabling, previous holes usable
- Mechanical lock (motor) for highest reliability
- Configuration via PC/laptop, data carrier, or NFC
- Master card handling also with PIN-code variant

The GL7p.x30x is a battery-powered RFID (Radio Frequency Identification) electronic locker lock with an integrated LEGIC advant reader, available with or without a PIN code keypad.

The innovative design lock is the ideal solution for implementing a cost-effective, secure and intuitively operated electronic locker locking system for the secure storage of personal belongings. The locks are suitable for almost any locker material and require no cabling. They can therefore also be easily retrofitted in existing locker systems - existing lock holes from mechanical locks can be easily reused.

Operation is via RFID (NFC) and/or PIN code, ensuring a wide range of applications and security levels. The status of the locker (unlocked/locked) is immediately visible based on the position of the individually customizable lock button.

Easy configuration is possible via USB or wireless interface, programming card, NFC or app. Thanks to low-power technology, a battery life of up to 10 years is possible. And most importantly: a GL7p locker system can be easily integrated into an RFID access and cashless payment system.

GL7p.2300 BK/GY

GL7p.3300

GL7p.3301

GL7p.3302 BK/GY

SALTO WECOSYSTEM

Order information

Description	Part No.
GL7p.2300 **GL7p.2300 BK/GY** Battery-powered, electronic locker lock for LEGIC advant, LEGIC prime, ISO 14443 (MIFARE) and ISO 15693 data carriers, with wireless interface, white/gray or black/gray (BK/GY) housing, without PIN keypad, without battery	1104025 1111128
GL7p.3300 **GL7p.3300 BK/GY** **GL7p.3301** **GL7p.3301 BK/GY** **GL7p.3302** **GL7p.3302 BK/GY** Battery-powered, electronic locker lock for LEGIC advant, LEGIC prime, ISO 14443 (MIFARE) and ISO 15693 data carriers, with wireless interface, white/gray or black/gray (BK/GY) housing, with PIN keypad, vertical orientation (.---0) or horizontal (.---1 = right-hinged door, .---2 = left-hinged door), without battery	1104026 1111129 1104027 1111130 1104028 1111131
Batterie 3.6V Lithium SL-860/S Battery for the GL7p	914430
GAT ECO.Basic Set BA lite Configuration set for the GL7p.x3xx locks. With USB programming cable, 3 MASTER, 1 DELETE MASTER, 1 SERVICE, 1 BATTERY, 1 PROGRAM and 1 APP KEY in LEGIC prime/advant technology	1110090
GL7p Battery Cover Battery compartment cover for the GL7p	1105853
GL7p Battery CoverKey Specific key to open the GL7p battery cover	749230
GL7p Button Plate - neutral white **GL7p Button Plate BK** - neutral black Button plate for the GL7p, without number, laser-print possible, adhesive layer on back **NOTE!** Various button plates and number stickers are available.	748633 1112674

Included in the scope of supply of the GL7p (see device features image on page 3):
(3) 36 mm straight latch (615929 - GL7p FR36 cam) with nut
NOTE! Other latches are available - refer to the "GL7p Cam Ordering Guide".
(7) fixing nut
(8, 9) Spacer sleeve and screw for anti-rotation protection
(12) Button plate neutral white without number with adhesive (748633 - GL7p Button Plate)

Typical application

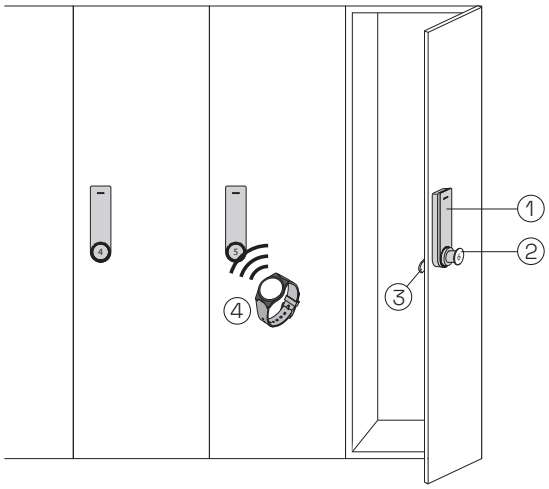

1 ....GL7p.x30x locker lock
2 ...Push button
3 ...Latch on the inside of the door
4 ...Identification (with RFID data carrier or PIN entry depending on lock type)

Technical data

Power supply: - GANTNER approved batteries:	1 x 3.6 V lithium battery, size: AA, capacity: 2.4 Ah - Tadiran SL-860/S (Part No. 914430) - Tadiran TL-4903/S (alternative)
Battery lifespan:	Up to 10 years with 10 actuations/day at +20 °C
Data storage:	EEPROM for 150 bookings, data retained during battery change
Reader type:	- LEGIC prime, LEGIC advant, LEGIC combi data carrier (CTC, MV, MP, MM) - ISO 14443: MIFARE Classic / Ultralight® / DESFire® - NFC (HCE) - ISO 15693 - HID iCLASS CSN (13.56 MHz, Card Serial Number / UID)
Reading field frequency - RFID: - Wireless:	13.56 MHz 2.4 GHz
Max. transmission power - RFID: - Wireless:	< 500 mW 3.7 dBm (2.344 mW)
Reading field range:	5 to 35 mm (depending on the installation conditions and data carrier)
Locking:	Mechanical with motorized latch
User guidance:	LED (multi-colored), beeper
Break-in resistance:	DIN 4547-2
Configuration interfaces:	USB 2.0 Micro-B, NFC, Wireless
Housing material:	Plastic (PC), halogen-free, V0
Housing color:	- white (front part), anthracite (rear part) - BK/GY: black (front part), anthracite (rear part)
Weight:	Approx. 0.25 kg
Permitted ambient temperature:	-20 to +60 °C
Recommended storage temperature:	-20 to 35 °C (max. storage time without battery inserted: 18 months)
Max. storage temperature:	60 °C (max. storage time without battery inserted: 6 months)
Protection type:	Refer to the GL7p Installation Manual
Certification:	CE, FCC, IC **NOTE!** See the GANTNER website for an overview of all certifications.

Features and dimensions

Front view **Side view**

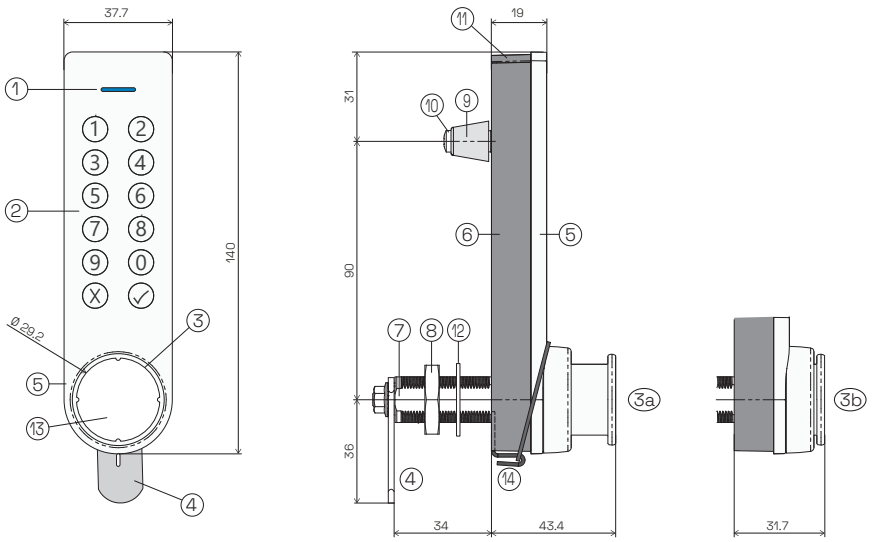

1 .....LED status indicator
2 ....PIN keypad (optional)
3 ....Button (a = “open”, b = “locked”)
4 ....Latch
5 ....Front part
6 ....Rear part
7 ....Mounting thread (M19x1)
8 ....Fixing nut
9 ....Spacer sleeve
10 ..Screw for anti-rotation protection
11 ...Battery compartment cover
12 ..Shim washer
13 ..Button Plate
14 ..Transportation lock

Measurements in mm