gantner

INSPIRED ACCESS

GT7.3x27

Access control terminal with RFID and barcode reader

FACTS AT A GLANCE

- Activation of turnstiles and doors via relay outputs
- Feedback inputs
- 1D and 2D barcodes (QR codes) supported
- Barcode tickets of almost any standard size possible
- Mobile tickets - 1D and 2D barcodes on smartphones
- Print@Home tickets supported
- Multi-colored LED bar for tariff and status indication
- Illuminated, circular RFID reading field
- Robust housing with safety glass
- Suitable for outdoor use
- Simple installation on tubular holder

The GT7.3527 and GT7.3727 are elegant terminals for access control in leisure facilities such as swimming pools, thermal baths, theme parks and aqua parks. The terminals are suitable for both indoor and outdoor use with all popular RFID technologies supported by the two variants.

The terminal is installed directly onto a turnstile or similar access control device to allow the seamless entry and exit of visitors. Various mounts are available for direct installation on the turnstile or on a wall

With minimized glare and reflection, the CMOS barcode reader provides optimal reading even in sunny conditions, making the GT7.3x27 the ultimate fixed-mount terminal for outdoor applications. All 1D and 2D barcodes (e.g. QR codes) can be read with the open and angled positioning of the reader allowing barcode tickets of various sizes and smartphones with a displayed barcode to be read.

If RFID credentials are also used in the system, visitors can identify themselves at the terminal by simply reading their credential at the circular reading field.

Authorization information is indicated by the clearly visible LEDs on top of the terminal with additional indication provided by the illuminated RFID reading field and acoustic signal. The clear user interface guides the user through the various, clearly structured levels.

SALTO WECOSYSTEM

Order information

Description	Part No.
GT7.3527 Multi-functional RFID and barcode terminal, G7 Access App, ISO 14443 (MIFARE®) and 15693 RFID reader, CMOS barcode scanner, color touchscreen, Ethernet, PoE, 2 relay outputs, 1 status input	1113146
GT7.3727 Multi-functional RFID and barcode terminal, G7 Access App, LEGIC advant with Proxy and iCLASS® RFID reader, CMOS barcode scanner, color touchscreen, Ethernet, PoE, 2 relay outputs, 1 status input	1113147
GAT Holder 6010 L Tubular holder for mounting the GT7.3x27 terminal onto a turnstile, stainless steel, Ø 30 mm	142019
GAT Holder 6120 Stainless steel bracket for wall mounting of the GT7.3x27, Ø 30 mm, plate size 92 x 92 mm	1114703
GPS7.3092 0.7A-1 Plug-in power supply with country adapter for EU, UK, USA, Australia Output: 24 V DC/0.75 A with open ends. Input: 100-240 V AC, 50/60 Hz	1108279
GPS7.1002 1.5A Power supply, Output: 24 V DC/1.5 A max., input: 100-240 V AC, 50/60 Hz Mains cable not included (see Power Cord xx)	1100872
Power Cord EU CH – IEC 60320 C7 **Power Cord UK – IEC 60320 C7** **Power Cord AUS – IEC 60320 C7** **Power Cord USA – IEC 60320 C7** 1.8 m power cord with applicable power plug (see country code)	494181 494282 1116117 636835

Typical application

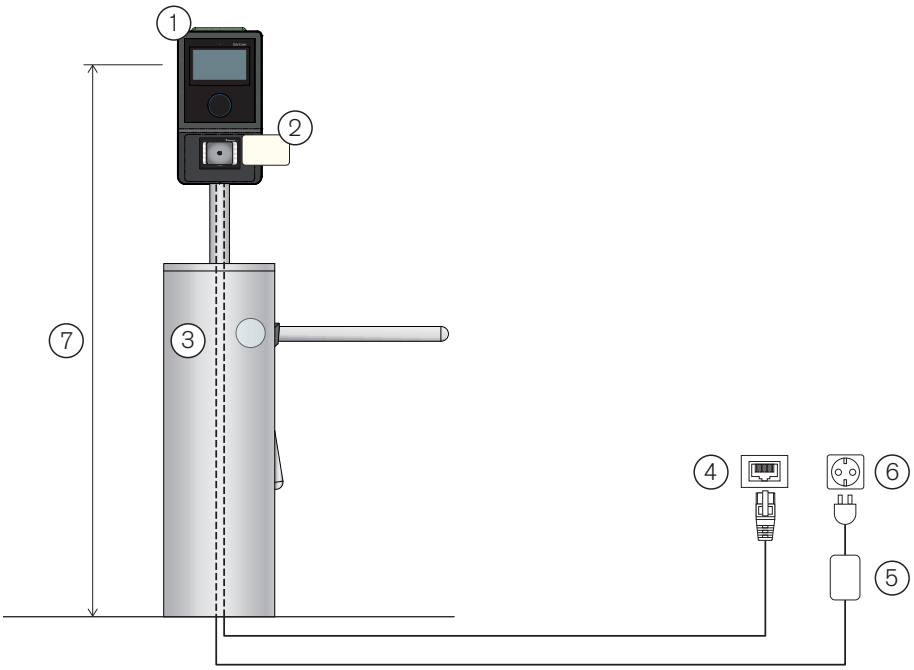

1. GT7.3x27
2. Credential/ticket
3. Turnstile
4. Network
5. Power supply
6. Power outlet
7. Recommended height = 1.3 m

Technical data

Nominal voltage	- Power supply: - PoE:	DC 24 V (LPS/SELV) PoE conf. to IEEE 802.3af, performance class 0
Perm. voltage range	- Power supply: - PoE:	DC 10 - 26 V (LPS/SELV) DC 36 - 57 V
Max. transm. power	- RFID: - Wireless int.:	500 mW 3.7 dBm (2.344 mW)
Nominal power consumption:		10 W
Reader type:	- GT7.3527: - GT7.3727:	ISO 14443 (MIFARE®) and ISO 15693 LEGIC advant, Proxy and HID iCLASS®
Reader frequency	- GT7.3527: - GT7.3727:	13.56 MHz 13.56 MHz / 125 kHz
User guidance	- Display: - RFID reader: - Acoustic: - LED bar:	4.3´´ color display with capacitive touchscreen, resolution 480 x 272 px LED color ring, multi-colored Speaker Multi-colored LED bar for tariff and status display
Host interface:		- Ethernet 10/100 Mbps, IPv4 and IPv6 - WLAN
Reader interfaces:		- RS-232 (barcode) - RS-485 (Gantner expansion bus) - Wiegand
Software integration:		- JSON interface - Generation 6 compatibility adapter (limited functions)
Weight:		1.68 kg (3.7 lb)
Permitted ambient temperature:		-25 to +50 °C (-13 to +122 °F)
Protection type:		IP44 (installed state)
Protection class:		III (Safety Extra-Low Voltage)
Environment class (VdS 2110):		IV (outdoor conditions)
Certification:		CE

Features and dimensions

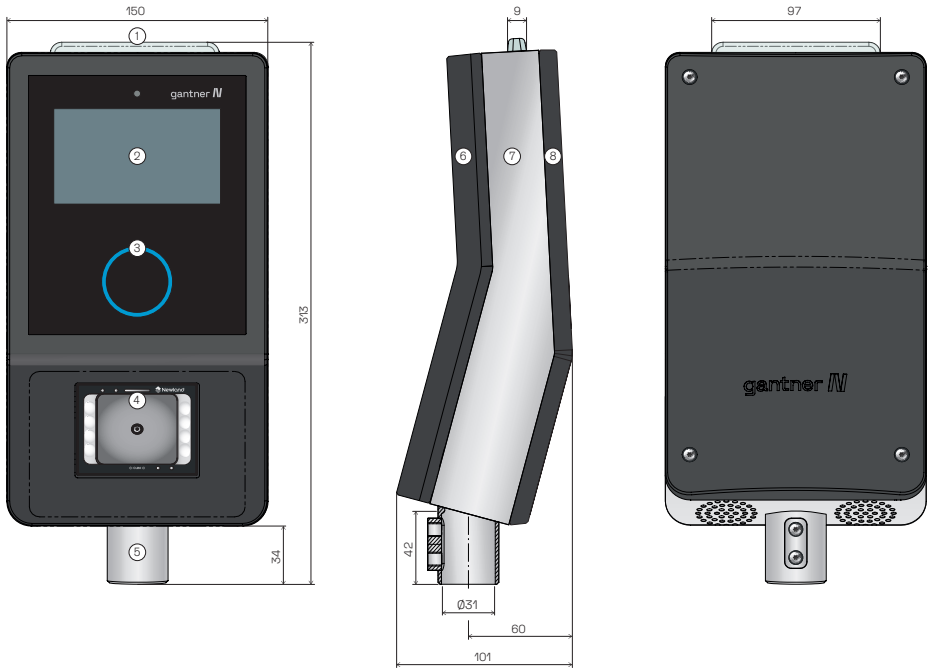

1. LED status display
2. Touchsreen
3. RFID reader with LED
4. Barcode reader
5. Tube holder
6. Rear part
7. Middle part
8. Front part

Measurements in mm